ECE 453

Demo 1: Overview

Announcements

- Friday (1/30) Meet in EH2540. No Seminar this week
- Begin working on Demo 1 Schematics and PCB. The goal is to have this completed by the end of the week.
- If you do not have an Altium License, be sure to register for an Altium Student License ASAP
- Make sure you attend Lab this week.

ECE453 Staff MCU Carrier Board

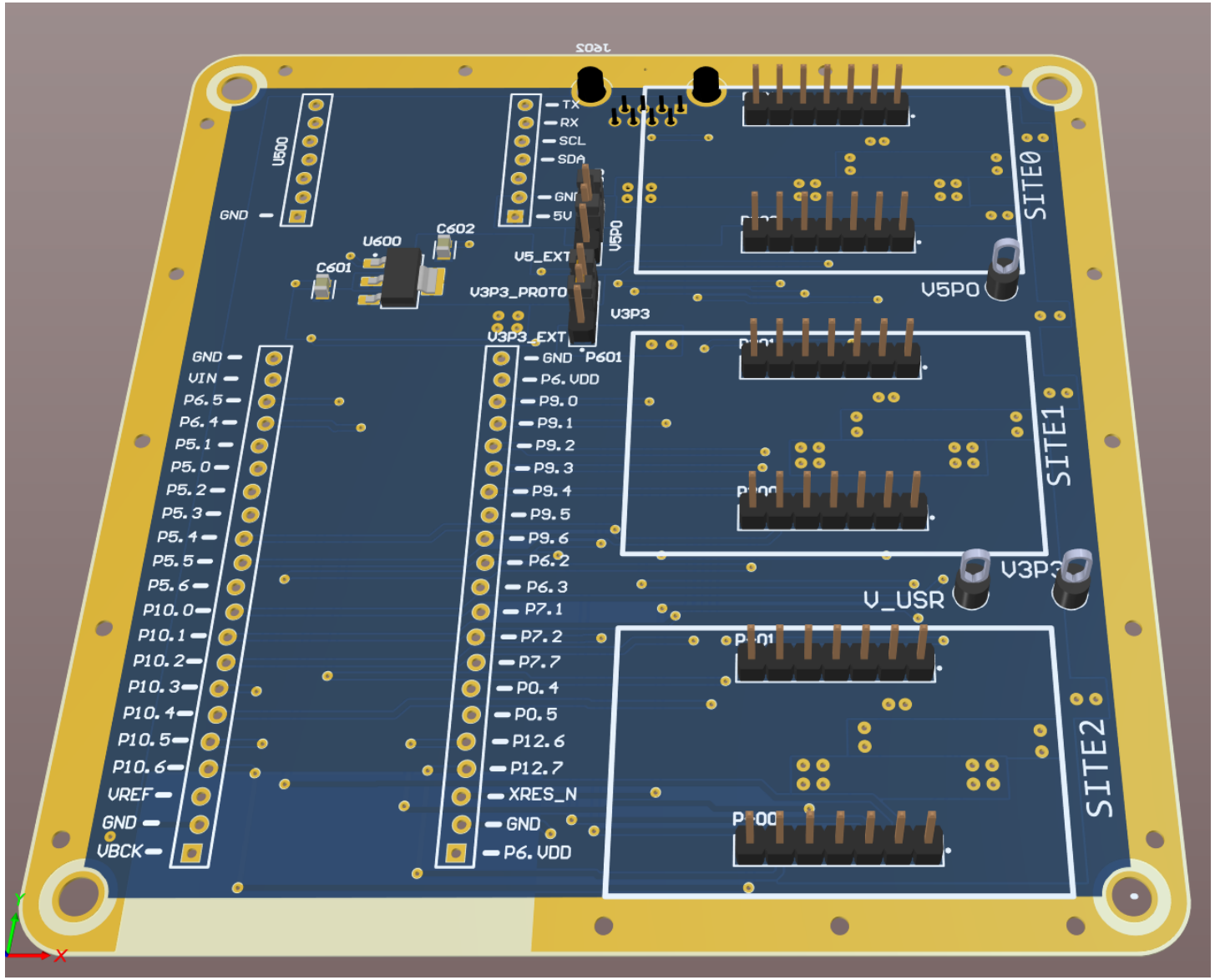

ECE453 Staff MCU Carrier Board – Pins/Ports

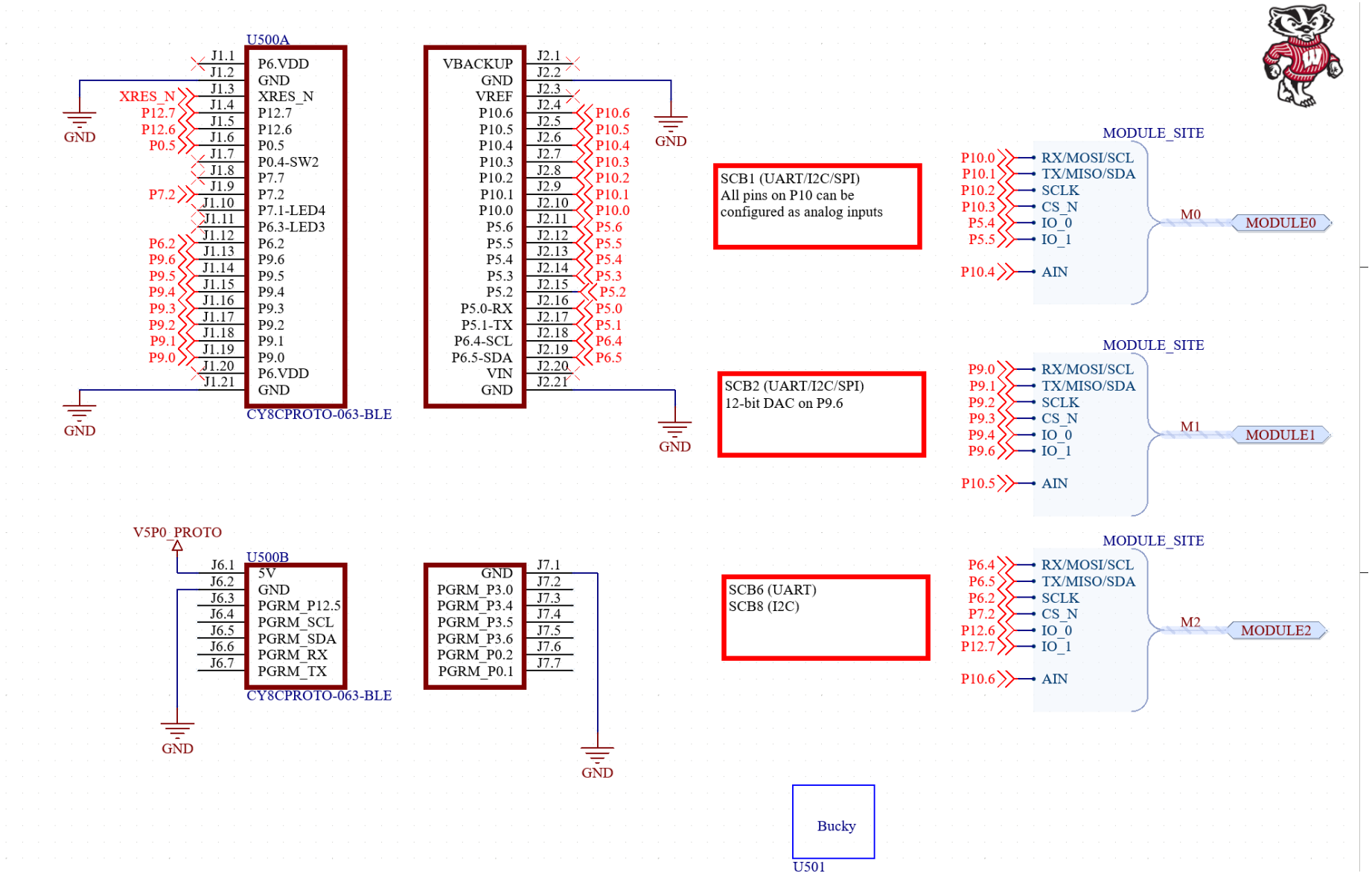

ECE453 Staff MCU Carrier Board – Module Site

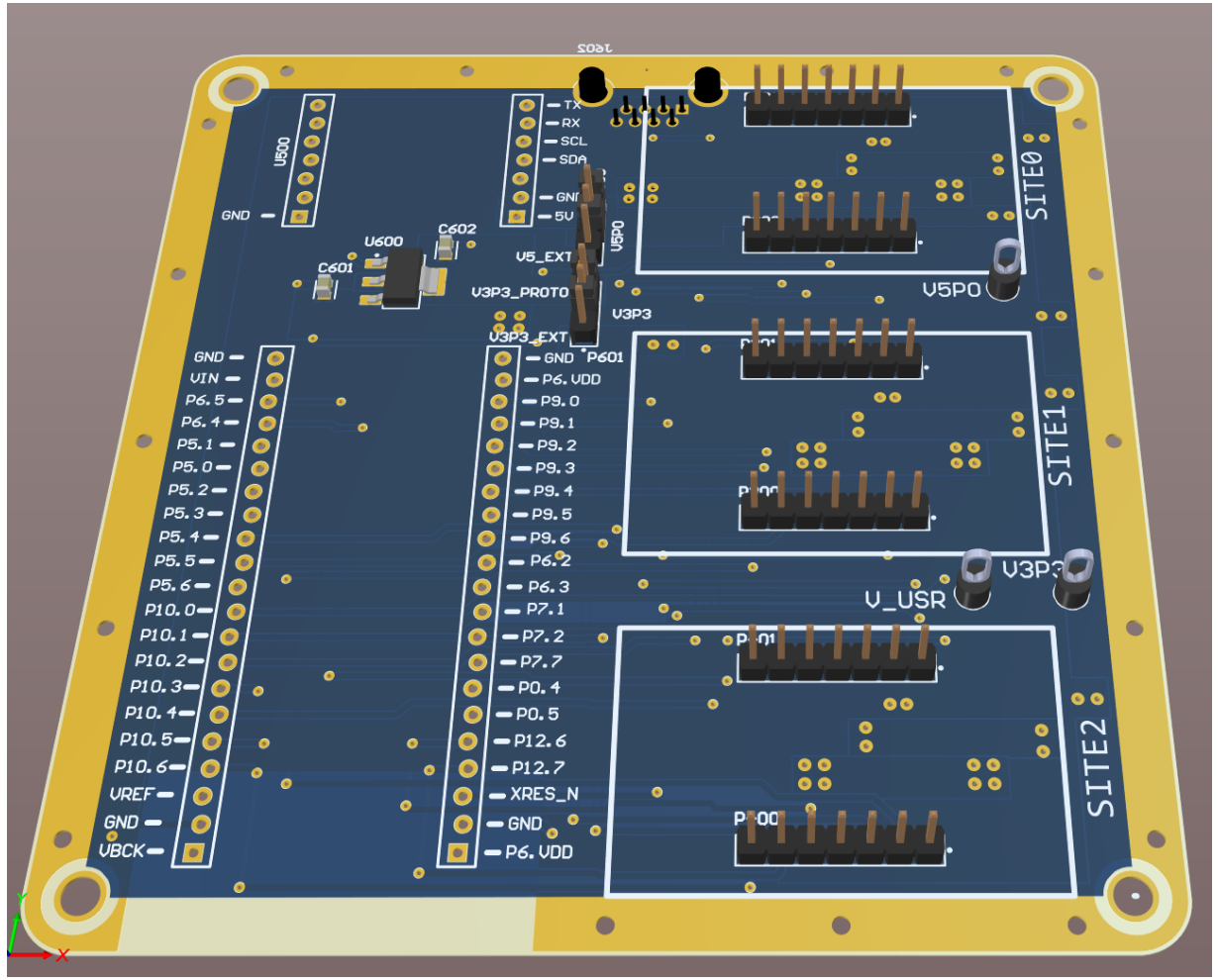

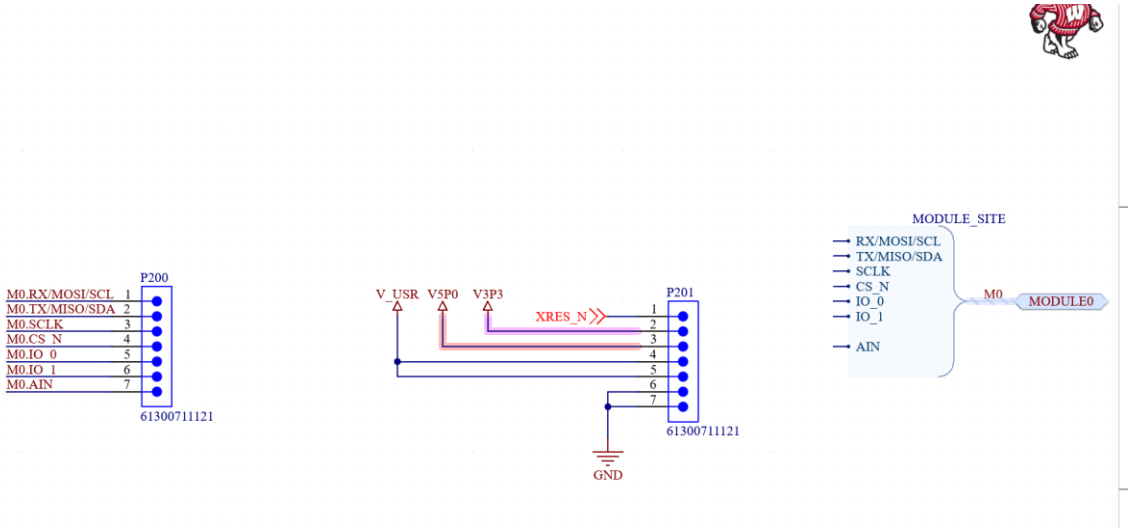

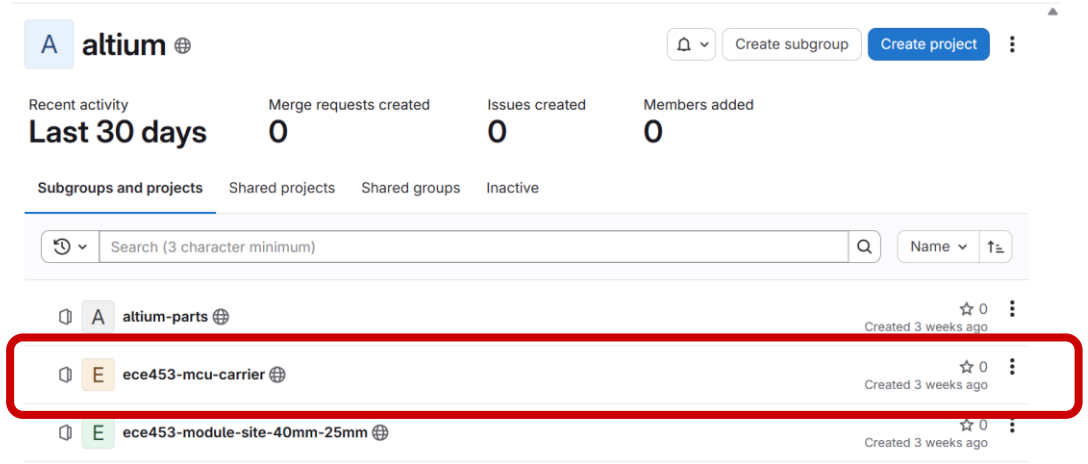

Module Sites

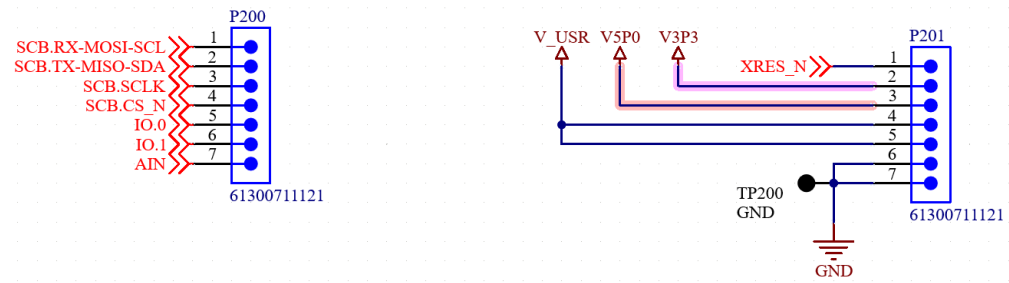

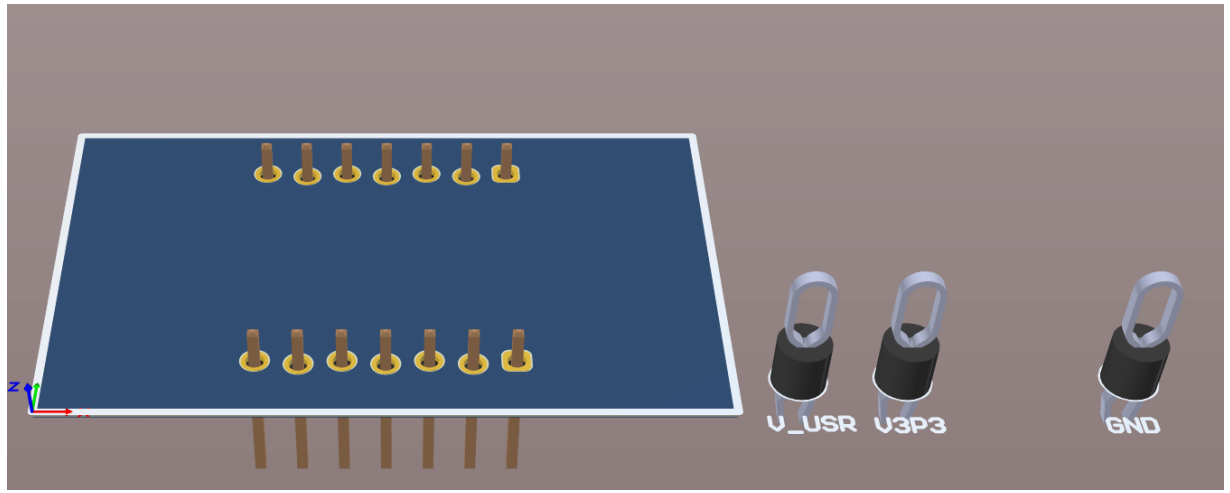

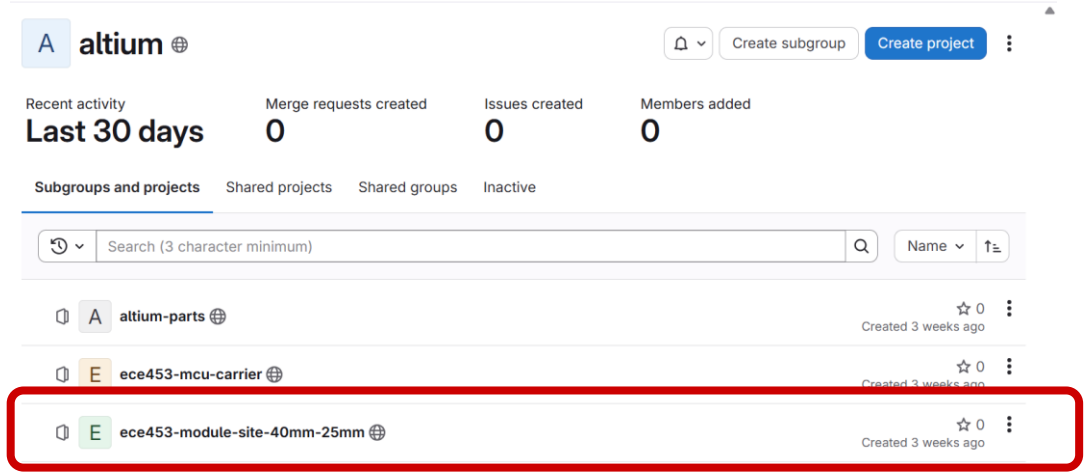

Staff Supplied Parts

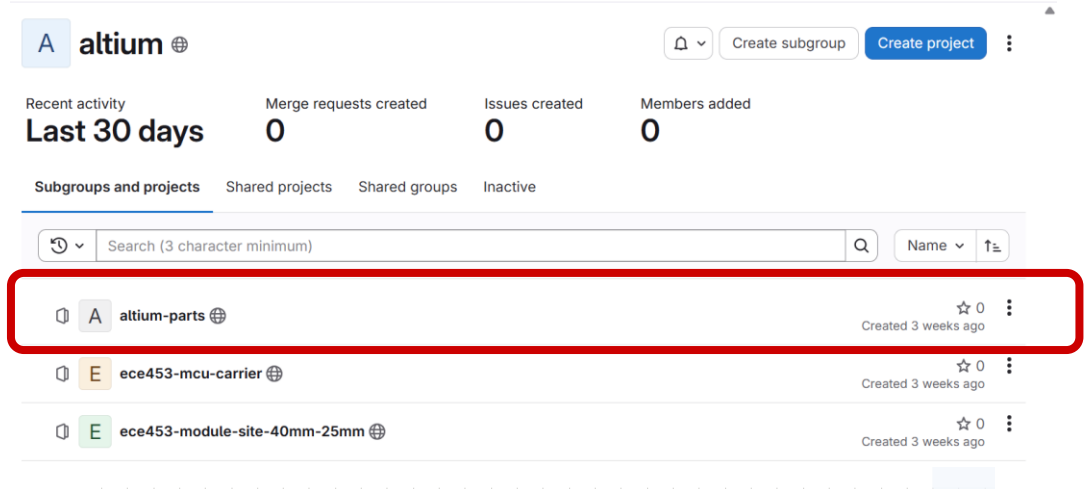

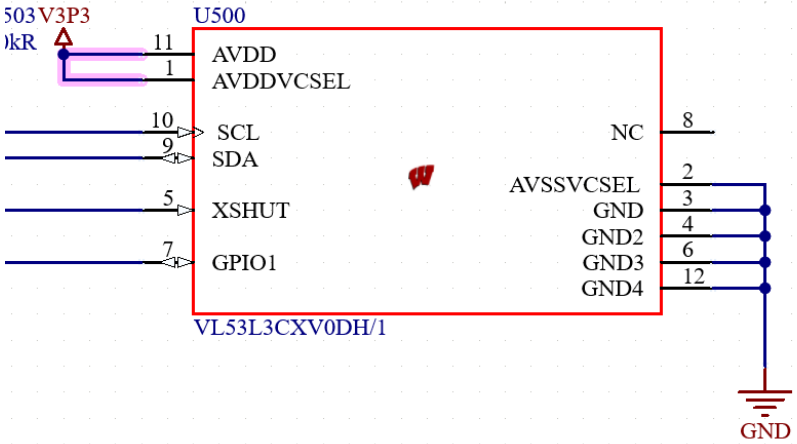

- Parts that are not available in Manufacturer Part Search
- Parts that have poor or incorrect footprints
- Check the provided parts library first when starting your staff designs.

DRV8251DDAR Brushed DC Motor Driver

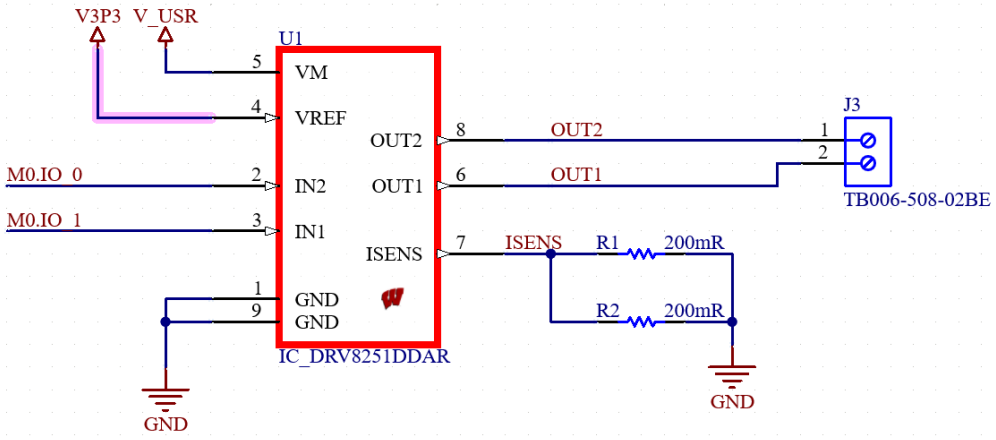

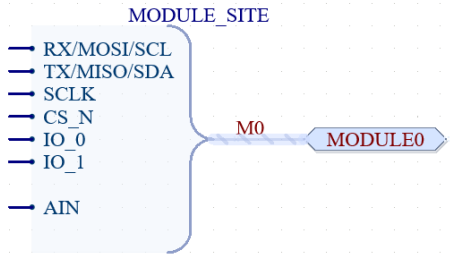

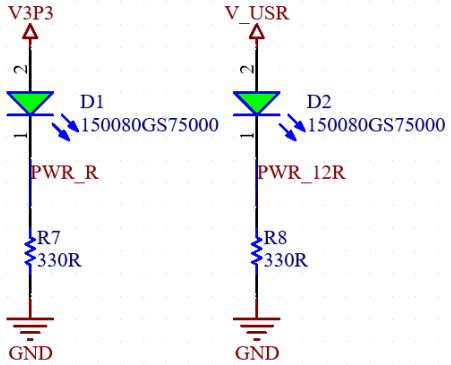

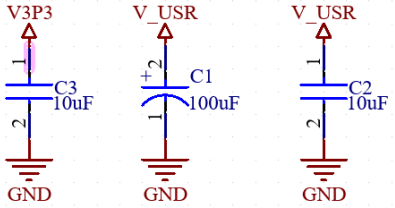

VL53L3XV0DH1 Time of Flight Distance Sensor

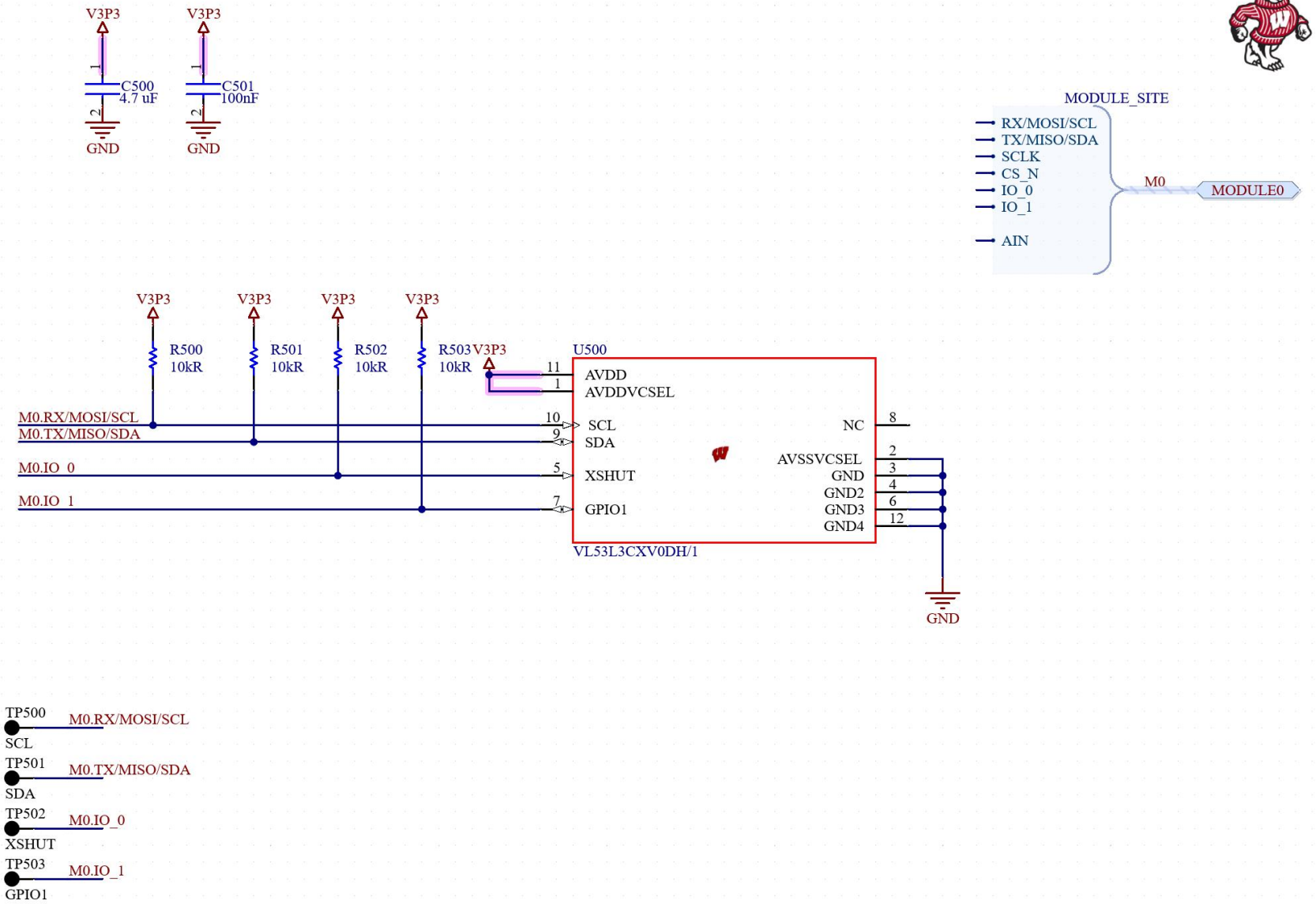

DRV8428PWPR Stepper Motor Driver

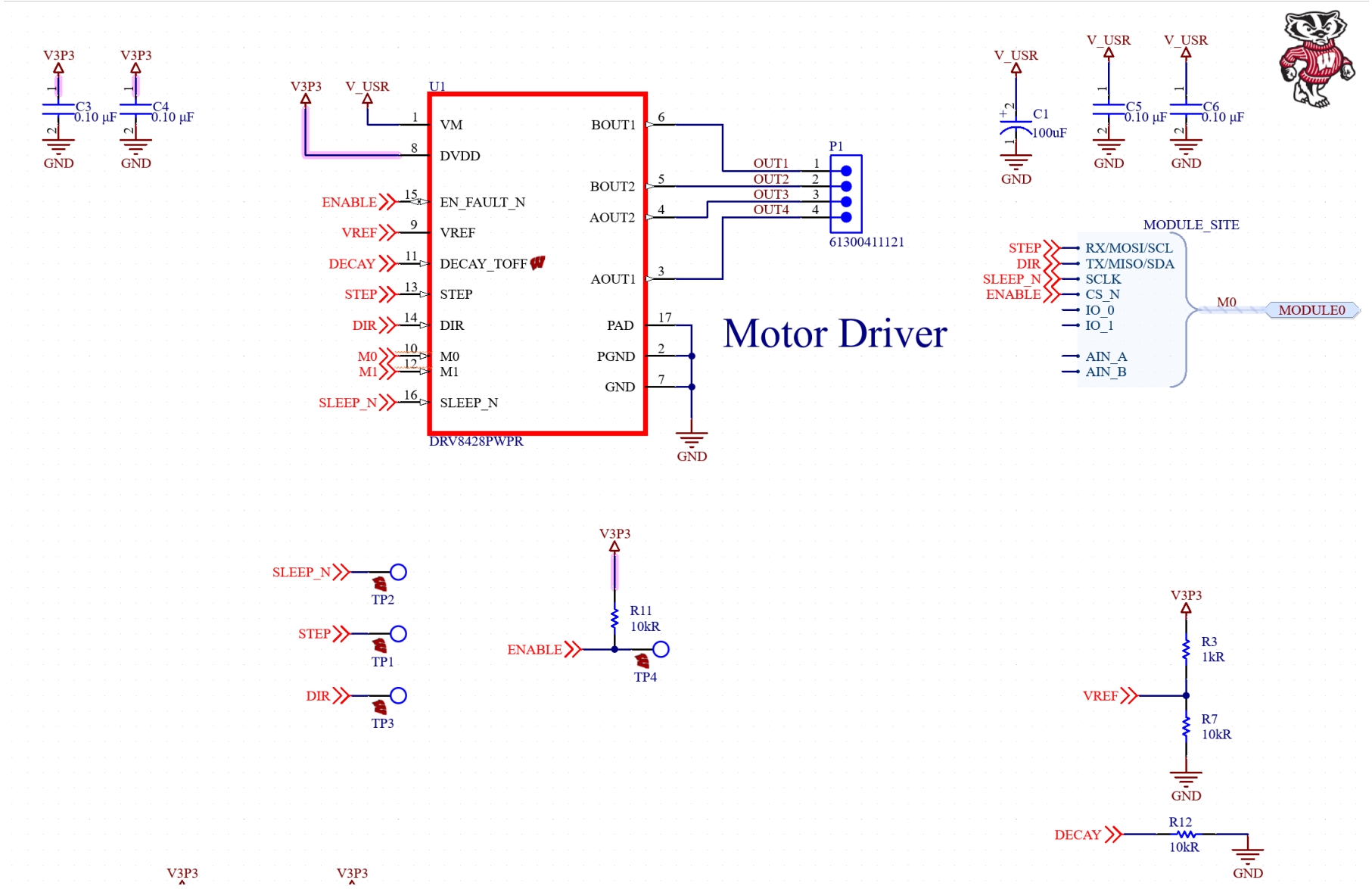
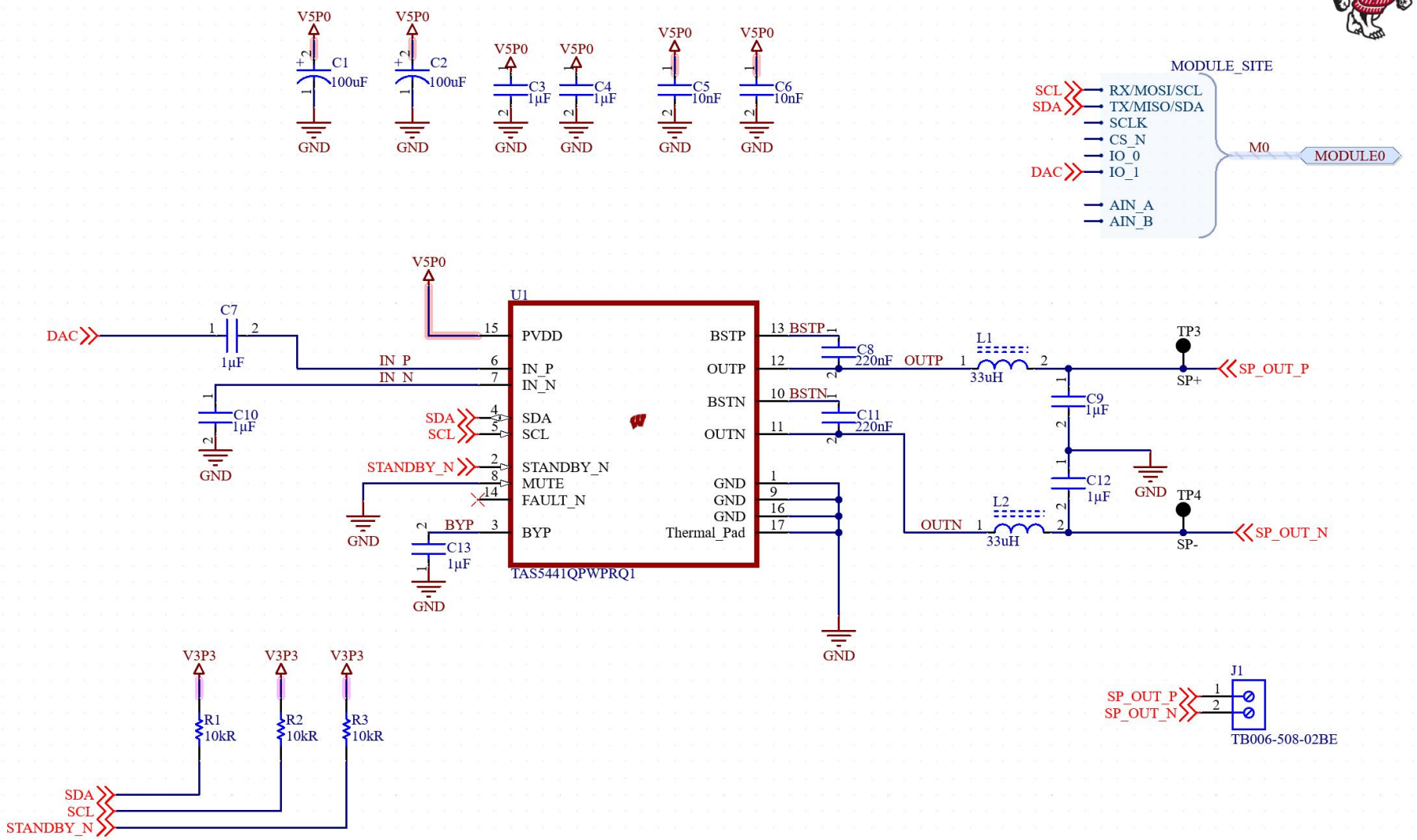
TAS5441QPWPRQ1 Audio Amplifier